82–0395 Wiring diagram heated rear screen

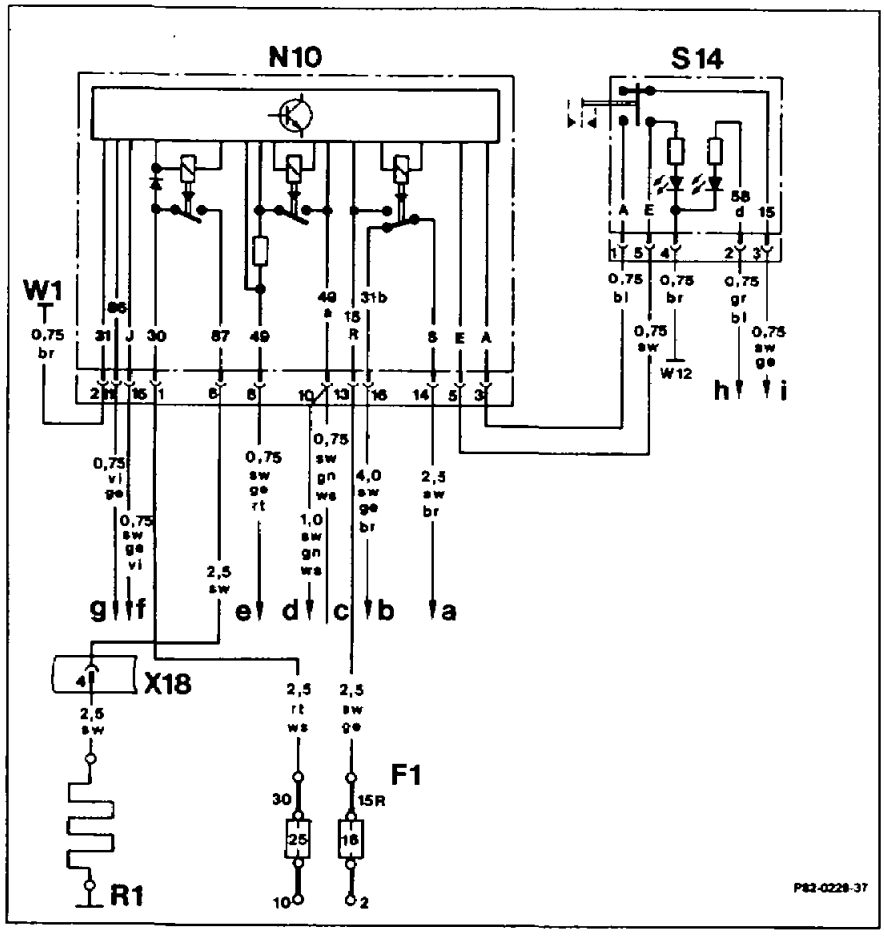

F1	Fuse and relay box
N10	Combination relay (turn signals heated rear screen, wiper motor)
R1	Heated rear screen
S14	Heated rear screen switch
W1	Main ground (behind instrument cluster)
X18	Plug connection, interior/tail lamp harness (8-pin)

a	To plug connection, combination switch (S4x1), contact 9
b	To wiper motor (M6/1), contact 1
c	To exterior lamp failure monitoring unit (N7), terminal 49a
d	To plug connection, combination switch (S4x1), contact 7
e	To hazard warning switch (S6), terminal 49
f	To plug connection, combination switch (S4x1), contact 14
g	To plug connection, combination switch (S4x1), contact 10
h	To terminal block, terminal 58d (2-pin) (X6)
i	To fuse and relay box (F1), fuse 1